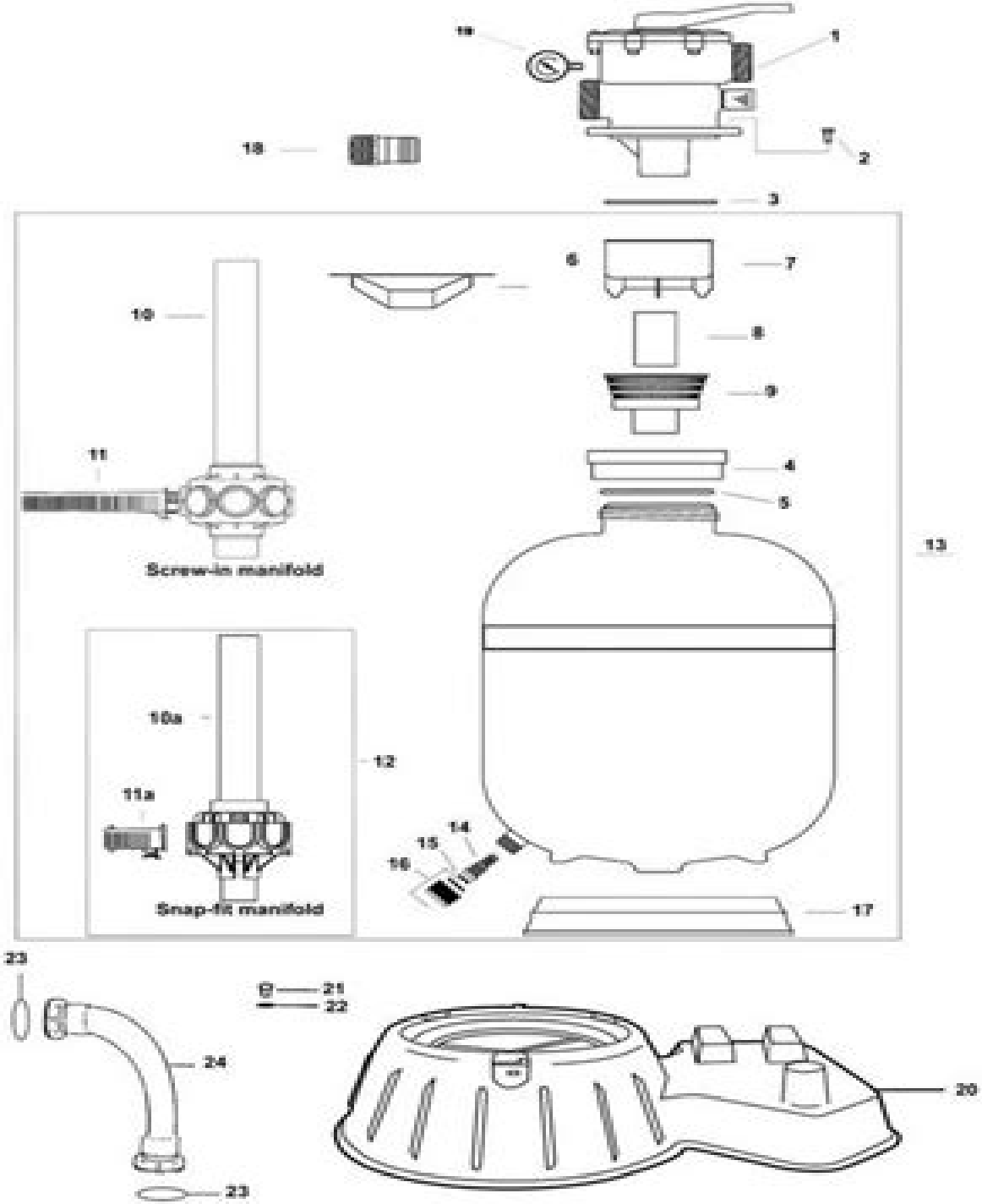
19
1
18
2
3
6
7
10
8
9
11
4
5
13
Screw-in manifold
10a
12
11a
15
14
16
Snap-fit manifold
17
23
21
22
24
20
23

Jacuzzi Laser 192 Pool Filter Manual

Terry Tamminen

Jacuzzi Laser 192 Pool Filter Manual:

Thomas Register ,2004 *The Complete Pool Manual for Homeowners & Professionals* Dan Hardy,2007 Described as a lifesaver for pool owners this book reveals how to save money on pool maintenance while handling poisons safely Pool doctor Hardy draws on his 20 years of experience in the industry to reveal everything homeowners and professionals need to know about chemicals mechanics safety repairing filtration and more Basic Pool Filtration and Chemsitry Manual D. G. Thomas,1957 **Pool Repair and Service Manual That Can Save You Hundreds of Dollars** Eldon J. Bailey,2015-01-11 Before you spend top dollar on pool maintenance check out the self help guide Pool Repair and Service Manual That Can Save You Hundreds of Dollars This do it yourself guide shows you everything you need to know about swimming pool repairs regular maintenance and winterizing Have you ever gotten frustrated with your pool when something breaks and you don t know what s wrong with it You make a call to the pool company and then have to wait for a serviceman to diagnose and fix the problem Next thing you know two weeks have passed by before you can finally use your pool again This book discusses all sorts of problems along with the solutions and detailed instructions including images of equipment parts and diagrams It will assist you in diagnosing and fixing the pool yourself Everything you can imagine that may go wrong with your pool is in this easy to follow guide The manual also aids in regular maintenance and includes instructions on how to open your pool for the season and prepare it for the winter A special troubleshooting section will help you figure out just what the problem may be **The Professional Pool Maintenance Manual** Terry Tamminen,1994-01-01 *A Guide to Swimming Pool Maintenance and Filtration Systems* E T Chan,2022-08-30 Swimming pools offer a controlled environment in which to exercise and they can also provide hours of fun and recreation But installing and maintaining a swimming pool can be a daunting task In A Guide to Swimming Pool Maintenance and Filtration Systems author E T Chan presents fundamental principles in the planning design maintenance and operation of swimming pools including the sizing of the pool filtration system and the filtration plant room Illustrated with stories and anecdotes from Chan s personal experience this guide offers technical know how to correctly design and install proper swimming pool filtration systems He discusses the importance of physics and science in maintaining a healthy pool and provides awareness of general pool health versus swimmer health Filled with a wealth of practical information Chan includes diagrams charts and graphs to help pool professionals apply their skills A Guide to Swimming Pool Maintenance and Filtration Systems serves as a manual for those involved in swimming pool design construction and maintenance It contains details covering the required mechanical and electrical engineering as well as the application of swimming pool filtration system designs and analyses in solving most of the practical and complex problems faced by the professionals in the industry today **Complete Pool Manual for Homeowners and Professionals** Dan Hardy,2014 If you are a pool owner you have made a major investment and proper swimming pool maintenance is an absolute must Keeping your pool clean and maintained should be a top priority since a clean pool is essential in many ways

Filter Manual Carl Bakal,1953

Delve into the emotional tapestry woven by Emotional Journey with in Experience **Jacuzzi Laser 192 Pool Filter Manual** . This ebook, available for download in a PDF format (*), is more than just words on a page; itis a journey of connection and profound emotion. Immerse yourself in narratives that tug at your heartstrings. Download now to experience the pulse of each page and let your emotions run wild.

https://splashdogs.com/files/virtual-library/fetch.php/grade%2011%20economics%20exempler%20november%202014%20paper%201.pdf

Table of Contents Jacuzzi Laser 192 Pool Filter Manual

1. Understanding the eBook Jacuzzi Laser 192 Pool Filter Manual
    - The Rise of Digital Reading Jacuzzi Laser 192 Pool Filter Manual
    - Advantages of eBooks Over Traditional Books
2. Identifying Jacuzzi Laser 192 Pool Filter Manual
    - Exploring Different Genres
    - Considering Fiction vs. Non-Fiction
    - Determining Your Reading Goals
3. Choosing the Right eBook Platform
    - Popular eBook Platforms
    - Features to Look for in an Jacuzzi Laser 192 Pool Filter Manual
    - User-Friendly Interface
4. Exploring eBook Recommendations from Jacuzzi Laser 192 Pool Filter Manual
    - Personalized Recommendations
    - Jacuzzi Laser 192 Pool Filter Manual User Reviews and Ratings
    - Jacuzzi Laser 192 Pool Filter Manual and Bestseller Lists
5. Accessing Jacuzzi Laser 192 Pool Filter Manual Free and Paid eBooks
    - Jacuzzi Laser 192 Pool Filter Manual Public Domain eBooks
    - Jacuzzi Laser 192 Pool Filter Manual eBook Subscription Services

    - Jacuzzi Laser 192 Pool Filter Manual Budget-Friendly Options
6. Navigating Jacuzzi Laser 192 Pool Filter Manual eBook Formats
    - ePub, PDF, MOBI, and More
    - Jacuzzi Laser 192 Pool Filter Manual Compatibility with Devices
    - Jacuzzi Laser 192 Pool Filter Manual Enhanced eBook Features
7. Enhancing Your Reading Experience
    - Adjustable Fonts and Text Sizes of Jacuzzi Laser 192 Pool Filter Manual
    - Highlighting and Note-Taking Jacuzzi Laser 192 Pool Filter Manual
    - Interactive Elements Jacuzzi Laser 192 Pool Filter Manual
8. Staying Engaged with Jacuzzi Laser 192 Pool Filter Manual
    - Joining Online Reading Communities
    - Participating in Virtual Book Clubs
    - Following Authors and Publishers Jacuzzi Laser 192 Pool Filter Manual
9. Balancing eBooks and Physical Books Jacuzzi Laser 192 Pool Filter Manual
    - Benefits of a Digital Library
    - Creating a Diverse Reading Collection Jacuzzi Laser 192 Pool Filter Manual
10. Overcoming Reading Challenges
    - Dealing with Digital Eye Strain
    - Minimizing Distractions
    - Managing Screen Time
11. Cultivating a Reading Routine Jacuzzi Laser 192 Pool Filter Manual
    - Setting Reading Goals Jacuzzi Laser 192 Pool Filter Manual
    - Carving Out Dedicated Reading Time
12. Sourcing Reliable Information of Jacuzzi Laser 192 Pool Filter Manual
    - Fact-Checking eBook Content of Jacuzzi Laser 192 Pool Filter Manual
    - Distinguishing Credible Sources
13. Promoting Lifelong Learning
    - Utilizing eBooks for Skill Development
    - Exploring Educational eBooks
14. Embracing eBook Trends

- Integration of Multimedia Elements
- Interactive and Gamified eBooks

Jacuzzi Laser 192 Pool Filter Manual Introduction

In the digital age, access to information has become easier than ever before. The ability to download Jacuzzi Laser 192 Pool Filter Manual has revolutionized the way we consume written content. Whether you are a student looking for course material, an avid reader searching for your next favorite book, or a professional seeking research papers, the option to download Jacuzzi Laser 192 Pool Filter Manual has opened up a world of possibilities. Downloading Jacuzzi Laser 192 Pool Filter Manual provides numerous advantages over physical copies of books and documents. Firstly, it is incredibly convenient. Gone are the days of carrying around heavy textbooks or bulky folders filled with papers. With the click of a button, you can gain immediate access to valuable resources on any device. This convenience allows for efficient studying, researching, and reading on the go. Moreover, the cost-effective nature of downloading Jacuzzi Laser 192 Pool Filter Manual has democratized knowledge. Traditional books and academic journals can be expensive, making it difficult for individuals with limited financial resources to access information. By offering free PDF downloads, publishers and authors are enabling a wider audience to benefit from their work. This inclusivity promotes equal opportunities for learning and personal growth. There are numerous websites and platforms where individuals can download Jacuzzi Laser 192 Pool Filter Manual. These websites range from academic databases offering research papers and journals to online libraries with an expansive collection of books from various genres. Many authors and publishers also upload their work to specific websites, granting readers access to their content without any charge. These platforms not only provide access to existing literature but also serve as an excellent platform for undiscovered authors to share their work with the world. However, it is essential to be cautious while downloading Jacuzzi Laser 192 Pool Filter Manual. Some websites may offer pirated or illegally obtained copies of copyrighted material. Engaging in such activities not only violates copyright laws but also undermines the efforts of authors, publishers, and researchers. To ensure ethical downloading, it is advisable to utilize reputable websites that prioritize the legal distribution of content. When downloading Jacuzzi Laser 192 Pool Filter Manual, users should also consider the potential security risks associated with online platforms. Malicious actors may exploit vulnerabilities in unprotected websites to distribute malware or steal personal information. To protect themselves, individuals should ensure their devices have reliable antivirus software installed and validate the legitimacy of the websites they are downloading from. In conclusion, the ability to download Jacuzzi Laser 192 Pool Filter Manual has transformed the way we access information. With the convenience, cost-effectiveness, and accessibility it offers, free PDF downloads have become a popular choice for students, researchers, and book lovers worldwide. However, it is crucial to engage in ethical downloading practices and

prioritize personal security when utilizing online platforms. By doing so, individuals can make the most of the vast array of free PDF resources available and embark on a journey of continuous learning and intellectual growth.

FAQs About Jacuzzi Laser 192 Pool Filter Manual Books

How do I know which eBook platform is the best for me? Finding the best eBook platform depends on your reading preferences and device compatibility. Research different platforms, read user reviews, and explore their features before making a choice. Are free eBooks of good quality? Yes, many reputable platforms offer high-quality free eBooks, including classics and public domain works. However, make sure to verify the source to ensure the eBook credibility. Can I read eBooks without an eReader? Absolutely! Most eBook platforms offer web-based readers or mobile apps that allow you to read eBooks on your computer, tablet, or smartphone. How do I avoid digital eye strain while reading eBooks? To prevent digital eye strain, take regular breaks, adjust the font size and background color, and ensure proper lighting while reading eBooks. What the advantage of interactive eBooks? Interactive eBooks incorporate multimedia elements, quizzes, and activities, enhancing the reader engagement and providing a more immersive learning experience. Jacuzzi Laser 192 Pool Filter Manual is one of the best book in our library for free trial. We provide copy of Jacuzzi Laser 192 Pool Filter Manual in digital format, so the resources that you find are reliable. There are also many Ebooks of related with Jacuzzi Laser 192 Pool Filter Manual. Where to download Jacuzzi Laser 192 Pool Filter Manual online for free? Are you looking for Jacuzzi Laser 192 Pool Filter Manual PDF? This is definitely going to save you time and cash in something you should think about.

Find Jacuzzi Laser 192 Pool Filter Manual :

~~grade 11 economics exempler november 2014 paper 1~~
grade 11 maths novmber 2014 paper2
grade 11 life science syllabus study guide 2014
grade 11 business studies 2014 november scope gauteng
grade 11 june exemplar papers
~~grade 11 geography mapwork november 2014 memorandum~~
grade 11 history paper 2 final exam 2014
grade 11 economic paper 2014
grade 11 exemplar mechanical papers 2013

grade 11 history paper 1 memorandum 2013
~~grade 11 physics memorandum for november 2014~~
~~grade 11 math exam papers~~
grade 10 physics exam papers and memos
~~grade 11 dgp answers~~
grade 11 geography term 3 memorandum 2014

Jacuzzi Laser 192 Pool Filter Manual :

sas tome 5 polonium 210 pdf uniport edu - Aug 02 2022
web people have search numerous times for their chosen books like this sas tome 5 polonium 210 but end up in harmful downloads rather than enjoying a good book with a cup of
polonium 210 wikipedia - Nov 05 2022
web polonium 210 210 po general symbol 210 po names polonium 210 210po po 210 radium f protons z 84 neutrons n 126 nuclide data natural abundance trace
pİlİÇ sosİs 5 lİ tolun tavukçuluk lezita hatay bayiliği - Feb 25 2022
web pİlİÇ sosİs 5 lİ İsteğe bağlı ısıtılarak veya kızartılarak tüketilebilir saklama koŞullari taze ürünün raf ömrü 0 4 c de orijinal ambalaj açılmadığı sürece
sas tome 5 polonium 210 wrbb neu edu - May 31 2022
web we provide sas tome 5 polonium 210 and numerous book collections from fictions to scientific research in any way in the midst of them is this sas tome 5 polonium 210
sas tome 5 polonium 210 uniport edu - Jul 01 2022
web jul 3 2023 sas tome 5 polonium 210 3 11 downloaded from uniport edu ng on july 3 2023 by guest sas 180 le piège de bangkok gérard de villiers 2018 10 15 mai tourna
sas tome 5 polonium 210 pdf paredeslepetitdejeuner panos - Sep 03 2022
web onslaught of sound and distractions yet nestled within the lyrical pages of sas tome 5 polonium 210 a charming perform of fictional brilliance that impulses with raw thoughts
ebooks my library sas tome 5 polonium 210 pdf - Jul 13 2023
web downloadebooksnow arts photography biographies business calendars children sbooks bibles comics technology cookbooks hobbies home education teaching
sas tome 5 polonium 210 muti eden cartonné achat - May 11 2023

web londres peu de temps après un ancien officier du fsb meurt de façon atroce le monde entier apprend qu il a ingéré une substance radioactive rare le polonium 210 le

polonium 210 5 2008 sas lastdodo - Jan 07 2023

web polonium 210 5 from 2008 buying selling or collecting manage your sas collection in the catalogue on lastdodo

sas tome 5 polonium 210 pdf copy support ortax - Mar 09 2023

web sas tome 5 polonium 210 pdf introduction sas tome 5 polonium 210 pdf copy title sas tome 5 polonium 210 pdf copy support ortax org created date 9 6 2023

sas tome 5 polonium 210 uniport edu - Oct 24 2021

web jul 5 2023 sas tome 5 polonium 210 if you ally craving such a referred sas tome 5 polonium 210 book that will manage to pay for you worth acquire the extremely best

sas tome 5 polonium 210 darelova com - Apr 29 2022

web sas tome 5 polonium 210 sas tome 5 polonium 210 2 downloaded from darelova com on 2023 06 21 by guest of what is known about weather variability and projected climate

sas 5 polonium 210 issue comic vine - Apr 10 2023

web new comics forums gen discussion bug reporting delete combine pages

sas tome 5 polonium 210 pdf uniport edu - Oct 04 2022

web may 22 2023 sas tome 5 polonium 210 1 8 downloaded from uniport edu ng on may 22 2023 by guest sas tome 5 polonium 210 when people should go to the ebook stores

sastome5polonium210 pdf dev sfcg - Jun 12 2023

web sastome5polonium210 1 sastome5polonium210 sastome5polonium210 downloaded from dev sfcg org by guest carina summers

210 paloma ave salinas ca 93905 redfin - Dec 26 2021

web 2 beds 2 baths 973 sq ft house located at 210 paloma ave salinas ca 93905 sold for 79 000 on aug 19 1986 view sales history tax history home value estimates and

sas 5 polonium 210 bedetheque - Aug 14 2023

web jun 27 2008 le polonium 210 le prince malko linge est alors sollicité par les services d espionnage anglais afin d élucider cet assassinat hors du commun de moscou au

210 s 5th st sac city ia 50583 redfin - Jan 27 2022

web 2 baths 1505 sq ft house located at 210 s 5th st sac city ia 50583 sold for 65 000 on aug 14 2017 view sales history tax history home value estimates and overhead

sas tome 167 polonium 210 gérard de villiers babelio - Feb 08 2023
web mar 28 2007 il ne voyait plus que l énorme fleur accrochée au revers du tailleur de la blonde elle se trouvait encore à trois mètres de lui si elle arrivait à un mètre et
sas t5 polonium 210 0 bd chez glénat de eden mutti malisan - Nov 24 2021
web jul 1 2008 sas t5 polonium 210 l agent secret malko linge enquête sur les meurtres d anna politkovskaïa et d alexandre litvinenko une alternance métronomique
sastome5polonium210 download only - Mar 29 2022
web sastome5polonium210 1 sastome5polonium2 10 sastome5polonium210 downloaded from kpdashboard aidscontrol gov lk by guest sawyer jackson
sas tome 5 polonium 210 pdf digital magazines - Dec 06 2022
web jan 11 2020 comics adult magazines celebrities 18 sas tome 5 polonium 210 pdf french 52 pages true pdf 93 mb download pdf from novafile com
le macchine del cantiere oggi guido io libro puzz 2023 - Aug 14 2023
web a due terzi del cammin della sua vita guido catalano crede di aver raggiunto una sorta di pace si è fortunosamente incontrato e scontrato con fidanzata in una notte estiva con
le macchine del cantiere oggi guido io libro puzz pdf - Dec 26 2021
web jul 8 2023 le macchine del cantiere oggi guido io libro puzz 1 9 downloaded from uniport edu ng on july 8 2023 by guest le macchine del cantiere oggi guido io
le macchine del cantiere oggi guido io libro puzz download - Feb 08 2023
web le macchine del cantiere oggi guido io libro puzz annuario della scuola archeologica di atene e delle missioni italiane in oriente volume 99 2021 tomo i aug 20 2022
il cantiere gallucci editore - Apr 29 2022
web maggiori informazioni divertiti a ricordare il nome di tutto ciò che trovi in un cantiere libri stimolanti per crescere curiosi data pubblicazione 11 giugno 2015 caratteristiche a
le macchine del cantiere oggi guido io libro puzz uniport edu - Jan 27 2022
web jul 31 2023 le macchine del cantiere oggi guido io libro puzz 2 9 downloaded from uniport edu ng on july 31 2023 by guest l italia che scrive 1961 florence guido zucconi
guida ai cani del mondo gino pugnetti mondadori 1987 oscar - Mar 29 2022
web guida ai cani del mondo gino pugnetti mondadori 1987 oscar illustrati eur 7 23 in vendita autore gino pugnetti titolo guida ai cani del mondo editore mondadori

le macchine del cantiere oggi guido io libro puzz uniport edu - Dec 06 2022
web le macchine del cantiere oggi guido io libro puzz 1 9 downloaded from uniport edu ng on april 22 2023 by guest le macchine del cantiere oggi guido io libro puzz
le macchine del cantiere oggi guido io libro puzz pdf - Apr 10 2023
web capitoli a trattare le varie tipologie di macchine da cantiere indicando tutte le formulazioni analitico matematiche atte a determinare le produzioni orarie delle varie macchine
il cantiere juan carlos onetti libro sur ibs - May 31 2022
web dec 20 2016 descrizione dopo la fortunata riscoperta de gli addii sur prosegue il piano delle riedizioni di tutte le opere di juan carlos onetti con uno dei più celebri romanzi
le macchine del cantiere oggi guido io libro puzz full pdf - Nov 24 2021
web le macchine del cantiere oggi guido io libro puzz archeologia dell architettura xxii 2017 contiene costi tempi e metri cubi quantificare in architettura giornata di studi
le macchine del cantiere oggi guido io libro puzz uniport edu - Feb 25 2022
web jun 28 2023 le macchine del cantiere oggi guido io libro puzz 1 11 downloaded from uniport edu ng on june 28 2023 by guest le macchine del cantiere oggi guido io
le macchine del cantiere oggi guido io libro puzz pdf - Mar 09 2023
web le macchine del cantiere oggi guido io libro puzz 2 9 downloaded from uniport edu ng on may 19 2023 by guest on high quality card stock and can be easily removed for
le macchine del cantiere oggi guido io libro puzz pdf - Sep 03 2022
web jul 13 2023 le macchine del cantiere oggi guido io libro puzz 2 6 downloaded from uniport edu ng on july 13 2023 by guest remembers the day picasso spent with le
le macchine del cantiere oggi guido io libro puzz pdf - Sep 22 2021
web nov 8 2022 le macchine del cantiere oggi guido io libro puzz is available in our digital library an online access to it is set as public so you can download it instantly our digital
le macchine del cantiere oggi guido io libro puzz pdf - Aug 02 2022
web may 7 2023 le macchine del cantiere oggi guido io libro puzz pdf thank you for downloading le macchine del cantiere oggi guido io libro puzz pdf as you may
le macchine del cantiere oggi guido io libro puzz pdf - Jul 13 2023
web aug 9 2023 macchine del cantiere oggi guido io libro puzz is available in our digital library an online entry to it is set as public consequently you can download it instantly

le macchine del cantiere oggi guido io libro puzzle ediz a - Oct 04 2022
web le macchine del cantiere oggi guido io conte io a capo di un fronte progressista io guido macchine cantiere in vendita ebay il nostro cantiere forum macchine storia
le macchine del cantiere oggi guido io libro puzz download - Jan 07 2023
web le macchine del cantiere oggi guido io libro puzz 5 5 sicurezza negli appalti e nei cantieri la gestione della sicurezza procedure aziendali ispezioni seguiti di infortunio
le macchine del cantiere oggi guido io libro puzz copy - Oct 24 2021
web le macchine del cantiere oggi guido io libro puzz 1 le macchine del cantiere oggi guido io libro puzz when somebody should go to the ebook stores search initiation by
le macchine del cantiere oggi guido io libro puzz umberto - May 11 2023
web le macchine del cantiere oggi guido io libro puzz recognizing the pretension ways to acquire this books le macchine del cantiere oggi guido io libro puzz is additionally
le macchine del cantiere oggi guido io libro puzz 2022 - Nov 05 2022
web le macchine del cantiere oggi guido io libro puzz is available in our digital library an online access to it is set as public so you can download it instantly our books collection
le macchine del cantiere oggi guido io libro puzz richard - Jun 12 2023
web could enjoy now is le macchine del cantiere oggi guido io libro puzz below a city in search of an author katia pizzi 2002 02 01 poised between the mediterranean and the
le macchine del cantiere oggi guido io libro puzz pdf - Jul 01 2022
web jun 16 2023 le macchine del cantiere oggi guido io libro puzz pdf if you ally craving such a referred le macchine del cantiere oggi guido io libro puzz pdf ebook that
access free maslach burnout inventory scale pdf free copy - Jun 01 2022
web sep 8 2023 access free maslach burnout inventory scale pdf free copy maslach burnout inventory burnout und emotionale dissonanz in der altenpflege eine untersuchung des zusammenhangs von emotionsarbeit und zeitdruck mit dem maslach burnout inventory mbi the role of personality factors and job characteristics in
the maslach burnout inventory manual researchgate - Jan 28 2022
web labeled mbi human services survey rather than maslach burnout inventory the scale should be presented as a survey of job related attitudes and not be linked to burnout in any way of course once
burnout self test maslach burnout inventory mbi different - Mar 10 2023
web the maslach burnout inventory mbi is the most commonly used tool to self assess whether you might be at risk of

burnout to determine the risk of burnout the mbi explores three components exhaustion depersonalization and personal achievement

pdf the maslach burnout inventory manual researchgate - Apr 11 2023

web jan 1 1997 according to maslach s conceptualization burnout is characterized by feelings of emotional exhaustion and a lack of emotional resources in response to excessive stress at work it is

psychometric properties and measurement invariance of the maslach - Mar 30 2022

web may 12 2021 the maslach burnout inventory general survey mbi gs is a widely used scale that measures burnout in the general professions debate persists regarding the factor structure of the mbi gs and there is scarce empirical evidence about the reliability validity and measurement invariance of the mbi g

maslach burnout inventory mbi statistics solutions - Sep 04 2022

web the mbi includes three questionnaires the human services survey the general survey and the one this report is on the educators survey the mbi surveys address three general scales emotional exhaustion measures feelings of being emotionally overextended and exhausted by one s work

burnout ucsf smn - Jul 02 2022

web maslach burnout inventory proqol smbm cbi burnout has been defined as a prolonged response to chronic interpersonal stressors on the job that is characterized by exhaustion cynicism and detachment and lack of accomplishment ineffectiveness from work maslach and leiter 2016

validity and reliability of the maslach burnout inventory student - Dec 27 2021

web nov 12 2018 the introduction of the maslach burnout inventory general survey mbi gs has paved the way to expand the horizons of burnout research outside the human services as its dimensions are defined more generally and do

burnout self test checking yourself for burnout mind tools - Jan 08 2023

web if you prefer rigorously validated tests then the maslach burnout inventory may be useful this was developed by christina maslach one of the leading researchers in the field of burnout copies can be purchased at this site if you want to reproduce this quiz you can purchase downloadable copies in our store

comparing the maslach burnout inventory to other well being - Feb 09 2023

web the maslach burnout inventory mbi is considered the gold standard for measuring burnout encompassing 3 scales emotional exhaustion depersonalization and personal accomplishment other well being instruments have shown utility in various settings and correlations between mbi and these instruments could provide evidence of

maslach burnout inventory student survey mbi ss a validity - Oct 05 2022

web feb 21 2014 in this research the scale is applied to 9 th 10 th 11 th and 12 th grade students the data obtained from

1020 high school students and is analysed for the validity and reliability studies of the mbi ss results show that the

pdf maslach burnout inventory general survey gs - Aug 03 2022

web jan 1 1996 the portuguese version was validated by nitzche 2015 with a cronbach s alpha of 0 88 3 dependent variableburnout the mbi gs schaufeli et al 1996 was used to measure burnout

psychometric properties and measurement invariance of the maslach - Apr 30 2022

web may 12 2021 the maslach burnout inventory general survey mbi gs is a widely used scale that measures burnout in the general professions debate persists regarding the factor structure of the mbi gs and there is scarce empirical evidence about the reliability validity and measurement invariance of the mbi gs in spanish speaking

maslach burnout inventory mbi mind garden - Jun 13 2023

web the maslach burnout inventory mbi was developed as a research instrument to assess burnout as a continuum on three different dimensions emotional exhaustion or exhaustion depersonalization or cynicism and reduced personal accomplishment or reduced professional efficacy the mbi can be used to assess the patterns of burnout

how to measure burnout accurately and ethically harvard business review - Aug 15 2023

web mar 19 2021 the maslach burnout inventory mbi is the first scientifically developed measure of burnout and is used widely in research studies around the world since its first publication in 1981

maslach burnout inventory wikipedia - Jul 14 2023

web the maslach burnout inventory mbi is a psychological assessment instrument comprising 22 symptom items pertaining to occupational burnout the original form of the mbi was developed by christina maslach and susan e jackson with the goal of assessing an individual s experience of burnout 2

maslach burnout inventory general survey factorial validity - Nov 06 2022

web dec 1 2014 data provided evidence to support the hypothesised three factor model after removing one item from the cynicism scale $\chi 2$ 86 432 29 cfi 94 gfi 95 nfi 93 and rmsea 05 results of multigroup analysis confirmed the invariance of the 15 items model across professional role gender age and organisational tenure

maslach burnout inventory and a self defined single item burnout - May 12 2023

web jun 4 2018 main measures the mbi measure calculated from a high score on either the emotional exhaustion or cynicism subscale and a single item measure of self defined burnout

maslach burnout inventory and a self defined single item burnout - Dec 07 2022

web two common burnout assessments are the maslach burnout inventory mbi and a single item self defined burnout measure relatively little is known about how the measures compare objective to identify the sensitivity specificity and concurrent validity of the self defined burnout measure compared to the more established mbi measure

classification of maslach burnout inventory researchgate - Feb 26 2022
web download scientific diagram classification of maslach burnout inventory from publication burnout syndrome among psychiatrists in egyptian mental health hospital background burnout is a