6. Remove 4 bolts securing gear case to drive shaft housing.

a - Bolt (4)

Disassembly

Water Pump

NOTE: *If water tube seal remained in drive shaft housing, remove seal from housing and reinstall on water pump cover. Secure seal to cover with Loctite 403.*

1. Remove 4 bolts securing pump cover.

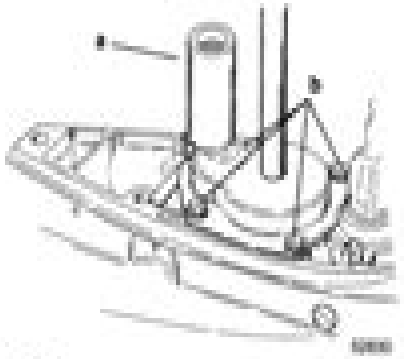

a - Seal
b - Bolt (4)

NOTE: *Replace cover if thickness of steel at discharge slots is 0.060 in. (1.524mm) or less, or if grooves (other than impeller sealing groove) in cover roof are more than 0.030 in. (0.762mm) deep.*

2. Remove cover, washer (above impeller), impeller, key and washer (below impeller).
3. Remove cover gasket, base plate and base gasket.

a - Cover
b - Washer (above impeller)
c - Impeller
d - Key
e - Washer (below impeller)
f - Cover Gasket
g - Face Plate
h - Base Gasket

NOTE: *Replace impeller if:*
- *Impeller blades are cracked, torn or worn.*
- *Impeller is glazed or melted*
- *Rubber portion of impeller is not bonded to impeller hub.*

4. Remove and/or replace exhaust deflector plate if damaged.

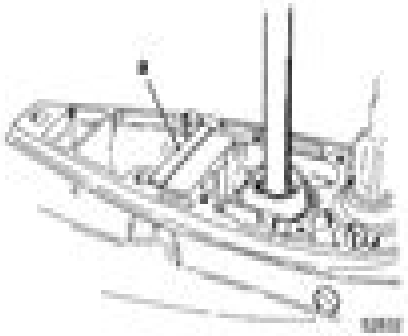

a - Deflector Plate

5. Remove bearing carrier attaching bolts and locking tab washers or flat washers. Discard tab washers.

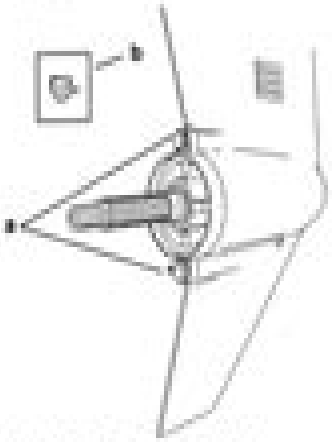

a - Bolts and Tab Washers or Flat Washers
b - Tab Washers Style 2

6. Using Puller (91-27780), remove carrier assembly from gear case.

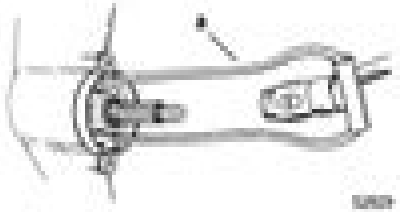

a - Puller (91-27780)

NOTE: *When removing propeller shaft assembly, cam follower may dislodge. Retrieve follower from gear housing.*

7. Remove propeller shaft assembly.

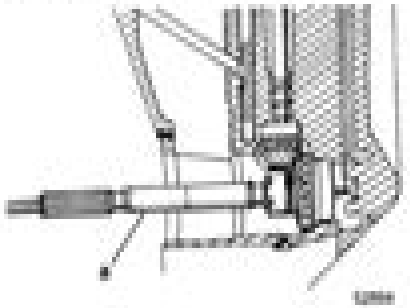

a - Propeller Shaft

Model	Drive Shaft Holding Tool
25, 45/50 (4-Stroke)	91-83180M
Force 40/50	91-825196
30/40, 40/50	91-825196

8. Remove pinion nut and discard.

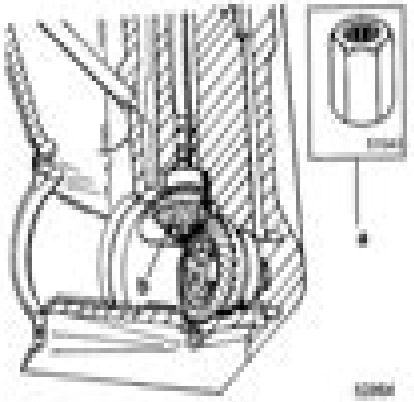

a - Drive Shaft Holding Tool
b - Pinion Gear

9. Remove drive shaft assembly and pinion gear.

Mercury Elpto 50 Hp Outboard Manual 2009

Penton Staff

Mercury Elpto 50 Hp Outboard Manual 2009:

Mercury/Mariner 75-250 HP Two-Stroke 1998-2009 Editors of Clymer Manuals,2015-12-01 Mercury Mariner 65 Jet 1998 2009 Mercury Mariner 75 HP 1998 2009 Mercury Mariner 80 Jet 1998 2009 Mercury Mariner 90 Jet 1998 2009 Mercury Mariner 100 HP 1998 2009 Mercury Mariner 105 Jet 1998 2009 Mercury Mariner 115 HP 4 Cyl 1998 2009 Mercury Mariner 115 HP Optimax V 6 1998 2009 Mercury Mariner 125 HP 1998 2009 Mercury Mariner 135 HP 1998 2009 Mercury Mariner 135 HP Optimax 1998 2009 Mercury Mariner 140 Jet 1998 2009 Mercury Mariner 150 HP Carburetor Equipped 1998 2009 Mercury Mariner 150 HP EFI 1998 2009 Mercury Mariner 150 XR6 1998 2009 Mercury Mariner 150 HP Optimax 1998 2009 Mercury Mariner 150 Mag III 1998 2009 Mercury Mariner 175 HP Carburetor Equipped 1998 2009 Mercury Mariner 175 HP EFI 1998 2009 Mercury Mariner 175 HP Optimax 1998 2009 Mercury Mariner 200 HP Carburetor Equipped 1998 2009 Mercury Mariner 200 HP EFI 1998 2009 Mercury Mariner 200 HP Optimax 1998 2009 Mercury Mariner 225 HP Carburetor Equipped 1998 2009 Mercury Mariner 225 HP EFI 1998 2009 Mercury Mariner 225 HP Optimax 1998 2009 Mercury Mariner 250 HP EFI 1998 2009 TROUBLESHOOTING LUBRICATION MAINTENANCE AND TUNE UP ENGINE TOP END ENGINE LOWER END CLUTCH AND EXTERNAL SHIFT MECHANISM TRANSMISSION AND INTERNAL SHIFT MECHANISM FUEL EMISSION CONTROL AND EXHAUST SYSTEMS ELECTRICAL SYSTEM COOLING SYSTEM WHEELS TIRES AND DRIVE CHAIN FRONT SUSPENSION AND STEERING REAR SUSPENSION BRAKES BODY AND FRAME COLOR WIRING DIAGRAMS Mercury/Mariner Outboard Shop Manual Penton Staff,2016-07-15 Mercury Mariner 4 HP 1995 2006 Mercury Mariner 5 HP 1995 2006 Mercury Mariner 6 HP 1995 2006 Mercury Mariner 9 9 HP 1995 2006 Mercury Mariner 15 HP 1995 2006 Mercury Mariner 25 HP 1995 2006 Mercury Mariner 30 HP 1995 2006 Mercury Mariner 40 HP 1995 2006 Mercury Mariner 50 HP 1995 2006 Mercury Mariner 75 HP 1995 2006 Mercury Mariner 90 HP 1995 2006 Does not cover 60 HP models TROUBLESHOOTING LUBRICATION MAINTENANCE AND TUNE UP ENGINE TOP END ENGINE LOWER END CLUTCH AND EXTERNAL SHIFT MECHANISM TRANSMISSION AND INTERNAL SHIFT MECHANISM FUEL EMISSION CONTROL AND EXHAUST SYSTEMS ELECTRICAL SYSTEM COOLING SYSTEM WHEELS TIRES AND DRIVE CHAIN FRONT SUSPENSION AND STEERING REAR SUSPENSION BRAKES BODY AND FRAME COLOR WIRING DIAGRAMS

Mercury Outboards Service Manual, Models 50, 70 ,1980 **Mercury Outboard Motor Service Manual** ,1976*

Mercury/Mariner Outboard Shop Manual Editors of Haynes Manuals,2015-01-15 Mercury Mariner 2 5 60 HP Two Stroke Outboard Service and Repair Manuals 1998 2006 B725This manual covers seventeen Mercury Mariner 2 stroke outboard motors ranging from 2 5 HP to 60 HP Clymer Marine and PWC manuals are the 1 source for DIY maintenance troubleshooting and repair With step by step procedures combined with detailed photography and extensive use of exploded parts views Clymer manuals are a must have tool for the do it yourselfer Models Covered Mercury Mariner 2 5 HP 1998 2006 Mercury Mariner 3 3 HP 1998 2006 Mercury Mariner 4 HP 1998 2006 Mercury Mariner 5 HP 1998 2006 Mercury Mariner 6

HP 1998 2006 Mercury Mariner 8 HP 1998 2006 Mercury Mariner 9 9 HP 1998 2006 Mercury Mariner 15 HP 1998 2006 Mercury Mariner 20 HP 1998 2006 Mercury Mariner 25 HP 1998 2006 Mercury Mariner 30 HP 1998 2006 Mercury Mariner 40 HP 1998 2006 Mercury Mariner 50 HP 1998 2006 Mercury Mariner 60 HP 1998 2006 Mercury Mariner 20 Jet 1998 2006 Mercury Mariner 30 Jet 1998 2006 Mercury Mariner 45 Jet 1998 2006 **Mercury/Mariner 4-Stroke OB 95-00** Penton Staff,2000-05-24 4 HP 5 HP 9 9 HP 15 HP 25 HP 30 HP 40 HP 50 HP 75 HP 90 HP **Seloc's Mercury Outboard Tune-up and Repair Manual** Clarence W. Coles,Howard U. Young,1980 **Clymer Mercury Outboard Shop Manual 45-225 Hp, 1972-1989** Penton Staff,1987-04-01 With the help of the Clymer Mercury Outboard Shop Manual 45 225 Hp 1972 1989 Repair Manual in your toolbox you will be able to maintain service and repair your outboard motor to extend its life for years to come Clymer manuals are very well known for their thorough and comprehensive nature This manual is loaded with step by step procedures along with detailed photography exploded views charts and diagrams to enhance the steps associated with a service or repair task This Clymer manual is organized by subsystem with procedures grouped together for specific topics The language used in this Clymer repair manual is targeted toward the novice mechanic but is also very valuable for the experienced mechanic The service manual by Clymer is an authoritative piece of DIY literature and should provide you the confidence you need to get the job done and save money too **Mercury Outboard Motor Service Manual, Vol. 5** ,1976 **Mercury Outboards Service Manual** Mercury Marine,1979 **Service Manual Mercury Outboards** Brunswick Corporation,1980 **Mercury 3-275 HP OB 90-1993** Penton Staff,2000-05-24 3 HP 3 3 HP 4 HP 5 HP 8 HP 9 9 HP 15 HP 20 HP 25 HP 40 HP 50 HP 60 HP 75 HP 90 HP 100 HP 115 HP 135 HP 150 HP 150XR4 150XR6 150XRi 175 HP 175XRi 200 HP 200XRi 250 HP 275 HP **Service Manual** Brunswick Corporation,1984 Master Service Manual Brunswick Corporation. Kiekhaefer Mercury Division,1971 *Mercury 3.9-135 HP OB 64-1971* Penton Staff,2000-05-24 3 9 HP 4 HP 6 HP 7 5 HP 9 8 HP 20 HP 35 HP 40 HP 50 HP 65 HP 80 HP 85 HP 90 HP 95 HP 100 HP 110 HP 115 HP 125 HP 135 HP *Mercury Marine 2.5-60 HP OB 94-97* Penton Staff,2000-05-24 2 5 HP 3 3 HP 4 HP 5 HP 6 HP 8 HP 9 9 HP 15 HP 20 HP 20 Jet 25 HP 30 HP 30 Jet 40 HP 45 Jet 50 HP 60 HP **Mercury/Mariner Outboard Shop Manual** Editors of Haynes Manuals,2015-01-15 Mercury Mariner 2 5 60 HP Two Stroke Outboard Service and Repair Manuals 1998 2006 B725This manual covers seventeen Mercury Mariner 2 stroke outboard motors ranging from 2 5 HP to 60 HP Clymer Marine and PWC manuals are the 1 source for DIY maintenance troubleshooting and repair With step by step procedures combined with detailed photography and extensive use of exploded parts views Clymer manuals are a must have tool for the do it yourselfer Models Covered Mercury Mariner 2 5 HP 1998 2006 Mercury Mariner 3 3 HP 1998 2006 Mercury Mariner 4 HP 1998 2006 Mercury Mariner 5 HP 1998 2006 Mercury Mariner 6 HP 1998 2006 Mercury Mariner 8 HP 1998 2006 Mercury Mariner 9 9 HP 1998 2006 Mercury Mariner 15 HP 1998 2006 Mercury Mariner 20 HP 1998 2006 Mercury Mariner 25 HP 1998 2006 Mercury Mariner 30 HP 1998 2006 Mercury Mariner 40 HP 1998 2006 Mercury Mariner 50 HP 1998 2006

Mercury Mariner 60 HP 1998 2006 Mercury Mariner 20 Jet 1998 2006 Mercury Mariner 30 Jet 1998 2006 Mercury Mariner 45 Jet 1998 2006 *Mercury Outboard Shop Manual 3.9-135 HP, 1964-1971* ,1986 **Mercury Four-Stroke Outboard 75-225 hp 2001-2003** Penton Staff,2000-05-24 75 HP 90 HP 115 HP 225 HP Mercury Outboard Shop Manual ,1993

Thank you very much for reading **Mercury Elpto 50 Hp Outboard Manual 2009**. Maybe you have knowledge that, people have look numerous times for their favorite books like this Mercury Elpto 50 Hp Outboard Manual 2009, but end up in infectious downloads.
Rather than enjoying a good book with a cup of tea in the afternoon, instead they juggled with some infectious bugs inside their computer.

Mercury Elpto 50 Hp Outboard Manual 2009 is available in our digital library an online access to it is set as public so you can download it instantly.
Our book servers saves in multiple locations, allowing you to get the most less latency time to download any of our books like this one.
Kindly say, the Mercury Elpto 50 Hp Outboard Manual 2009 is universally compatible with any devices to read

https://splashdogs.com/data/browse/HomePages/kahlua%20pork%20recipe.pdf

Table of Contents Mercury Elpto 50 Hp Outboard Manual 2009

1. Understanding the eBook Mercury Elpto 50 Hp Outboard Manual 2009
    - The Rise of Digital Reading Mercury Elpto 50 Hp Outboard Manual 2009
    - Advantages of eBooks Over Traditional Books
2. Identifying Mercury Elpto 50 Hp Outboard Manual 2009
    - Exploring Different Genres
    - Considering Fiction vs. Non-Fiction
    - Determining Your Reading Goals
3. Choosing the Right eBook Platform
    - Popular eBook Platforms
    - Features to Look for in an Mercury Elpto 50 Hp Outboard Manual 2009
    - User-Friendly Interface
4. Exploring eBook Recommendations from Mercury Elpto 50 Hp Outboard Manual 2009

- Personalized Recommendations
- Mercury Elpto 50 Hp Outboard Manual 2009 User Reviews and Ratings
- Mercury Elpto 50 Hp Outboard Manual 2009 and Bestseller Lists

5. Accessing Mercury Elpto 50 Hp Outboard Manual 2009 Free and Paid eBooks
   - Mercury Elpto 50 Hp Outboard Manual 2009 Public Domain eBooks
   - Mercury Elpto 50 Hp Outboard Manual 2009 eBook Subscription Services
   - Mercury Elpto 50 Hp Outboard Manual 2009 Budget-Friendly Options
6. Navigating Mercury Elpto 50 Hp Outboard Manual 2009 eBook Formats
   - ePub, PDF, MOBI, and More
   - Mercury Elpto 50 Hp Outboard Manual 2009 Compatibility with Devices
   - Mercury Elpto 50 Hp Outboard Manual 2009 Enhanced eBook Features
7. Enhancing Your Reading Experience
   - Adjustable Fonts and Text Sizes of Mercury Elpto 50 Hp Outboard Manual 2009
   - Highlighting and Note-Taking Mercury Elpto 50 Hp Outboard Manual 2009
   - Interactive Elements Mercury Elpto 50 Hp Outboard Manual 2009
8. Staying Engaged with Mercury Elpto 50 Hp Outboard Manual 2009
   - Joining Online Reading Communities
   - Participating in Virtual Book Clubs
   - Following Authors and Publishers Mercury Elpto 50 Hp Outboard Manual 2009
9. Balancing eBooks and Physical Books Mercury Elpto 50 Hp Outboard Manual 2009
   - Benefits of a Digital Library
   - Creating a Diverse Reading Collection Mercury Elpto 50 Hp Outboard Manual 2009
10. Overcoming Reading Challenges
    - Dealing with Digital Eye Strain
    - Minimizing Distractions
    - Managing Screen Time
11. Cultivating a Reading Routine Mercury Elpto 50 Hp Outboard Manual 2009
    - Setting Reading Goals Mercury Elpto 50 Hp Outboard Manual 2009
    - Carving Out Dedicated Reading Time
12. Sourcing Reliable Information of Mercury Elpto 50 Hp Outboard Manual 2009

- Fact-Checking eBook Content of Mercury Elpto 50 Hp Outboard Manual 2009
- Distinguishing Credible Sources

13. Promoting Lifelong Learning
    - Utilizing eBooks for Skill Development
    - Exploring Educational eBooks
14. Embracing eBook Trends
    - Integration of Multimedia Elements
    - Interactive and Gamified eBooks

Mercury Elpto 50 Hp Outboard Manual 2009 Introduction

In the digital age, access to information has become easier than ever before. The ability to download Mercury Elpto 50 Hp Outboard Manual 2009 has revolutionized the way we consume written content. Whether you are a student looking for course material, an avid reader searching for your next favorite book, or a professional seeking research papers, the option to download Mercury Elpto 50 Hp Outboard Manual 2009 has opened up a world of possibilities. Downloading Mercury Elpto 50 Hp Outboard Manual 2009 provides numerous advantages over physical copies of books and documents. Firstly, it is incredibly convenient. Gone are the days of carrying around heavy textbooks or bulky folders filled with papers. With the click of a button, you can gain immediate access to valuable resources on any device. This convenience allows for efficient studying, researching, and reading on the go. Moreover, the cost-effective nature of downloading Mercury Elpto 50 Hp Outboard Manual 2009 has democratized knowledge. Traditional books and academic journals can be expensive, making it difficult for individuals with limited financial resources to access information. By offering free PDF downloads, publishers and authors are enabling a wider audience to benefit from their work. This inclusivity promotes equal opportunities for learning and personal growth. There are numerous websites and platforms where individuals can download Mercury Elpto 50 Hp Outboard Manual 2009. These websites range from academic databases offering research papers and journals to online libraries with an expansive collection of books from various genres. Many authors and publishers also upload their work to specific websites, granting readers access to their content without any charge. These platforms not only provide access to existing literature but also serve as an excellent platform for undiscovered authors to share their work with the world. However, it is essential to be cautious while downloading Mercury Elpto 50 Hp Outboard Manual 2009. Some websites may offer pirated or illegally obtained copies of copyrighted material. Engaging in such activities not only violates copyright laws but also undermines the efforts of authors, publishers, and researchers. To ensure ethical downloading, it is advisable to utilize reputable websites that prioritize the legal distribution of content. When downloading Mercury Elpto 50 Hp Outboard

Manual 2009, users should also consider the potential security risks associated with online platforms. Malicious actors may exploit vulnerabilities in unprotected websites to distribute malware or steal personal information. To protect themselves, individuals should ensure their devices have reliable antivirus software installed and validate the legitimacy of the websites they are downloading from. In conclusion, the ability to download Mercury Elpto 50 Hp Outboard Manual 2009 has transformed the way we access information. With the convenience, cost-effectiveness, and accessibility it offers, free PDF downloads have become a popular choice for students, researchers, and book lovers worldwide. However, it is crucial to engage in ethical downloading practices and prioritize personal security when utilizing online platforms. By doing so, individuals can make the most of the vast array of free PDF resources available and embark on a journey of continuous learning and intellectual growth.

FAQs About Mercury Elpto 50 Hp Outboard Manual 2009 Books

What is a Mercury Elpto 50 Hp Outboard Manual 2009 PDF? A PDF (Portable Document Format) is a file format developed by Adobe that preserves the layout and formatting of a document, regardless of the software, hardware, or operating system used to view or print it. **How do I create a Mercury Elpto 50 Hp Outboard Manual 2009 PDF?** There are several ways to create a PDF: Use software like Adobe Acrobat, Microsoft Word, or Google Docs, which often have built-in PDF creation tools. Print to PDF: Many applications and operating systems have a "Print to PDF" option that allows you to save a document as a PDF file instead of printing it on paper. Online converters: There are various online tools that can convert different file types to PDF. **How do I edit a Mercury Elpto 50 Hp Outboard Manual 2009 PDF?** Editing a PDF can be done with software like Adobe Acrobat, which allows direct editing of text, images, and other elements within the PDF. Some free tools, like PDFescape or Smallpdf, also offer basic editing capabilities. **How do I convert a Mercury Elpto 50 Hp Outboard Manual 2009 PDF to another file format?** There are multiple ways to convert a PDF to another format: Use online converters like Smallpdf, Zamzar, or Adobe Acrobats export feature to convert PDFs to formats like Word, Excel, JPEG, etc. Software like Adobe Acrobat, Microsoft Word, or other PDF editors may have options to export or save PDFs in different formats. **How do I password-protect a Mercury Elpto 50 Hp Outboard Manual 2009 PDF?** Most PDF editing software allows you to add password protection. In Adobe Acrobat, for instance, you can go to "File" -> "Properties" -> "Security" to set a password to restrict access or editing capabilities. Are there any free alternatives to Adobe Acrobat for working with PDFs? Yes, there are many free alternatives for working with PDFs, such as: LibreOffice: Offers PDF editing features. PDFsam: Allows splitting, merging, and editing PDFs. Foxit Reader: Provides basic PDF viewing and editing capabilities. How do I compress a PDF file? You can use online tools like Smallpdf, ILovePDF, or desktop software like Adobe

Acrobat to compress PDF files without significant quality loss. Compression reduces the file size, making it easier to share and download. Can I fill out forms in a PDF file? Yes, most PDF viewers/editors like Adobe Acrobat, Preview (on Mac), or various online tools allow you to fill out forms in PDF files by selecting text fields and entering information. Are there any restrictions when working with PDFs? Some PDFs might have restrictions set by their creator, such as password protection, editing restrictions, or print restrictions. Breaking these restrictions might require specific software or tools, which may or may not be legal depending on the circumstances and local laws.

Find Mercury Elpto 50 Hp Outboard Manual 2009 :

kahlua pork recipe
kat kerr revealing heaven volume 3
kamico staar american history answer key
karcher hds 750 manual
karl storz insufflator service manual
kaeser kompressor manual
jx35 body repair manual
karcher pressure washer repair manual
~~kawasaki 1100 zxi jet ski service manual~~
jvc rc-qw20 manual
kahr pm9 manual
kawasaki 1985 g5 ke100 manual
katy isd summer camps 2014
~~kaf300c mule 550 manual~~
kangaroo math grade1

Mercury Elpto 50 Hp Outboard Manual 2009 :

Grammersense3 SB Anskey 2 | PDF | Mount Everest Student Book 3 Answer Key. Oxford University Press Grammar Sense 3/Answer Key 1. CHAPTER 1. A3: After You Read (p. 5) 2. T ... Grammersense3 SB Anskey 2 PDF Grammar Sense. Student Book 3 Answer Key. B2: Working on Verb Forms (p. 9) CHAPTER 1. SIMPLE PRESENT A3: After You Read (p. 5) BASE FORM PRESENT CONTINUOUS Grammar Sense 3 Student Online Practice A comprehensive, four-level American English

grammar practice series that gives learners a true understanding of how grammar is used in authentic contexts. Part ... Ebook free Grammar sense 3 answer key file type ... - resp.app Jun 23, 2023 — Yeah, reviewing a book grammar sense 3 answer key file type could build up your near links listings. This is just one of the solutions for ... Grammar Sense 3 - Continuous Improvement ... answer is simple. No surgeon will ever be able to keep his or her hand as steady as the hand of a robot. No surgeon is ever being able to greatly magnify a. Grammar sense 3. Teacher's book : Sherak, Katharine Jul 9, 2021 — Grammar sense 3. Teacher's book. by: Sherak, Katharine. Publication date: 2012. Topics: English language -- Textbooks for foreign speakers ... Grammar Sense 3 Student Book with Online Practice ... Key features. Grammar Instruction Engaging reading texts, comprehensive grammar ... Looking for a sensible solution for teaching grammar? View Course. Part of ... 5 The Present Perfect Continuous Find the error in each sentence and correct it. 1. Grammar Sense 3 Test: Chapter 5 ... Grammar Sense 3 Answer Key: Chapter 5. © Oxford University Press. 5 Answer ... Grammar Sense 3 Pdf - Fill Online, Printable, Fillable, Blank Fill Grammar Sense 3 Pdf, Edit online. Sign, fax and printable from PC, iPad, tablet or mobile with pdfFiller Instantly. Try Now! Computer Technology NOCTI written assessments consist of questions to measure an individual's factual theoretical knowledge. Administration Time: 3 hours. Number of Questions: 153. NOCTI Computer Technology Exam Flashcards Study with Quizlet and memorize flashcards containing terms like White Box Test, Grey Box Test, Black Box Test and more. Computer Repair Technology NOCTI written assessments consist of questions to measure an individual's factual theoretical knowledge. Administration Time: 3 hours. Number of Questions: 193. Computer Technology/Computer Systems (PA) NOCTI written assessments consist of questions to measure an individual's factual theoretical knowledge. Administration Time: 3 hours. Number of Questions: 201. Nocti Practice Test Flashcards Students also viewed. Revised Nocti Study Guide. 242 terms. Profile Picture · jinli22 ... Computer Technology Vocabulary for NOCTI 30 questions. 30 terms. Profile ... Computer Programming NOCTI written assessments consist of questions to measure an individual's factual theoretical knowledge. Administration Time: 3 hours. Number of Questions: 160. Computer Programming NOCTI written assessments consist of questions to measure an individual's factual theoretical knowledge. Administration Time: 3 hours. Number of Questions: 173. Computer Systems Networking (PA) Test Type: The Computer Systems Networking PA assessment was developed based on a Pennsylvania statewide competency task list and contains a multiple-choice and. Assessment Information Sheet-Computer-Science-NOCTI Review the Proctor Guide for Online Administration located at the Client Services Center. Provide a copy of the Proctor Guide to the designated proctor ... NOCTI exam Study guide 161 question.pdf - 1. Source code... View NOCTI exam Study guide 161 question.pdf from BIOLOGY 1233 at Cheektowaga High School. 1. Source code can be produced with a _? a. printer b. text ... Italy Travel Guide by Rick Steves Explore Italy! Get inspired with Rick Steves' recommended places to go and things to do, with tips, photos, videos, and travel information on Italy. Italy Tours & Vacations 2023 & 2024 Rick Steves Italy tours provide the best value for your trip to

Europe. Our stress-free Italy vacations package together small groups, great guides, central ... Italy Guidebook for 2024 - Rick Steves Travel Store Rick's picks for sights, eating, sleeping; In-depth coverage of our favorite Italian destinations; Great self-guided neighborhood walks and museum tours ... One week in Italy - Rick Steves Travel Forum Jun 14, 2018 — Rome is amazing, but it will be hot. Our absolute favorite place in Italy is Lake Como----particularly Varenna. We also loved the Amalfi Coast, ... Italy's Amalfi Coast - Video - Rick Steves' Europe Advice on Italy Travel Plan - Rick Steves Travel Forum Jul 22, 2023 — In planning a trip, it helps to pick the exact specific museums and monuments you will see and what you will acquiesce to skipping. Then you ... Italy Itinerary Rick's Best Three-Week Trip to Italy. The big-ticket stops in Italy — Venice, the Cinque Terre, Florence, Rome, and the cluster south of Rome (Sorrento/Naples/ ... Rick Steves Italy (Travel Guide) This guide gives you an overview together with every little thing you need for planning a trip. How many days, transportation, hotels, restaurants, sights, ...